MD31A

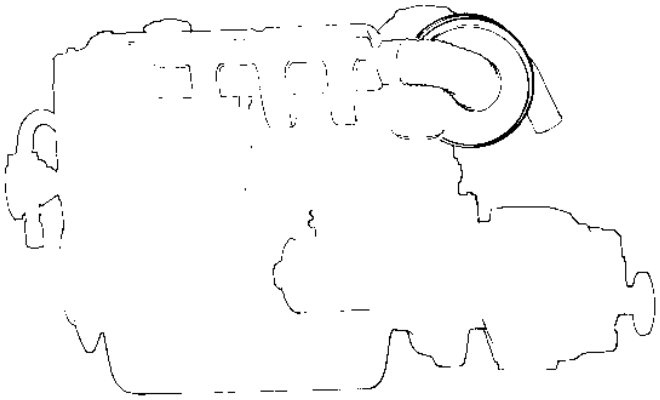

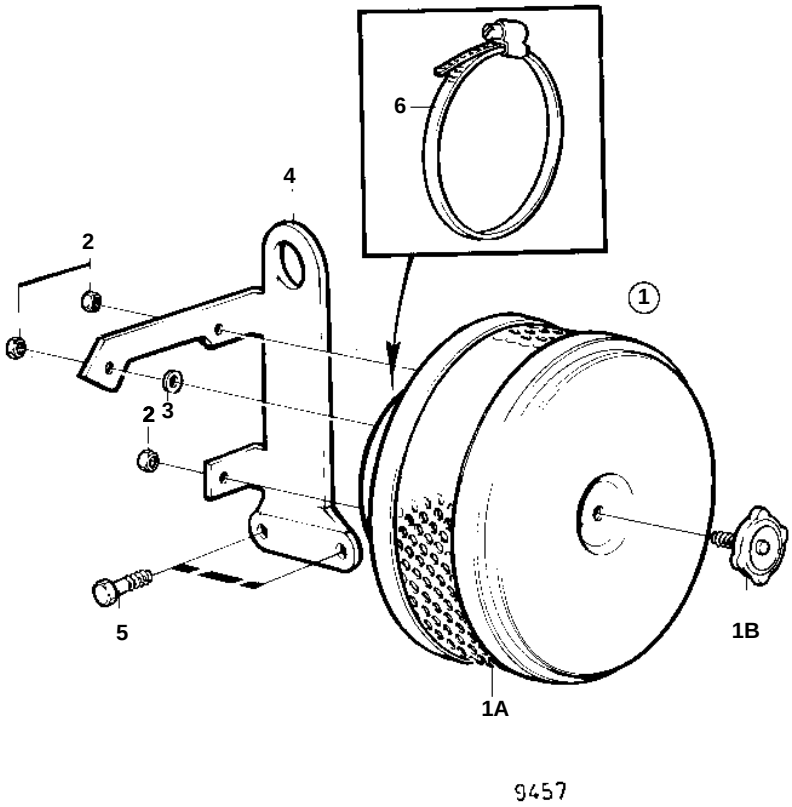

MD31A

REF	PART NO.	QTY	DESCRIPTION	
1	838889	1	Air cleaner	
1A	858488	1	· Filter insert	
1B	859729	1	· Knob	
2	945407	3	Flange nut	
3	943481	1	Hose clamp	
4	838890	1	Bracket	
5	973083	2	Flange screw	